Professionel LED Belysning

RoHS | IP54 | FLICKER FREE | 230V | CRI>97 | Dimmable

# EVO S FULL SPECTRUM LED DOWNLIGHT

**Dimmable LED Downlight 7.5W 220-240Vac 50/60Hz**
**LED 6W 160mA IP54 CRI>97 SDCM<3**

Packaging

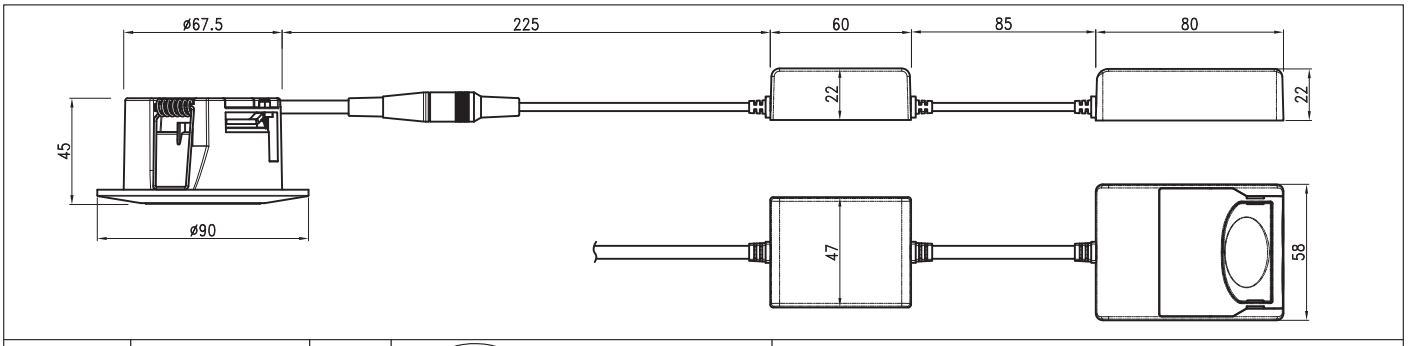


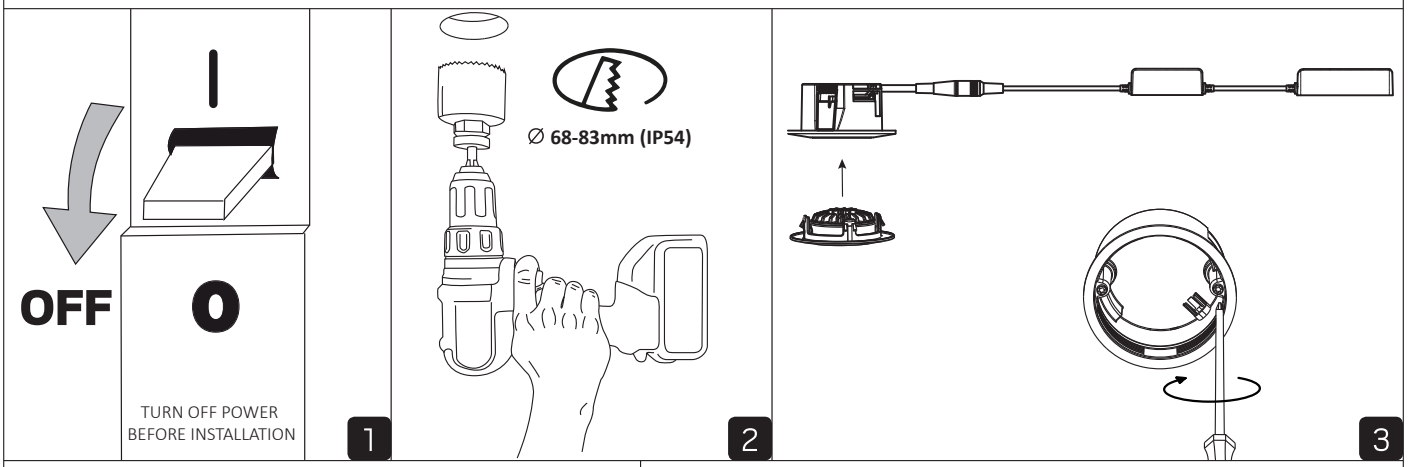


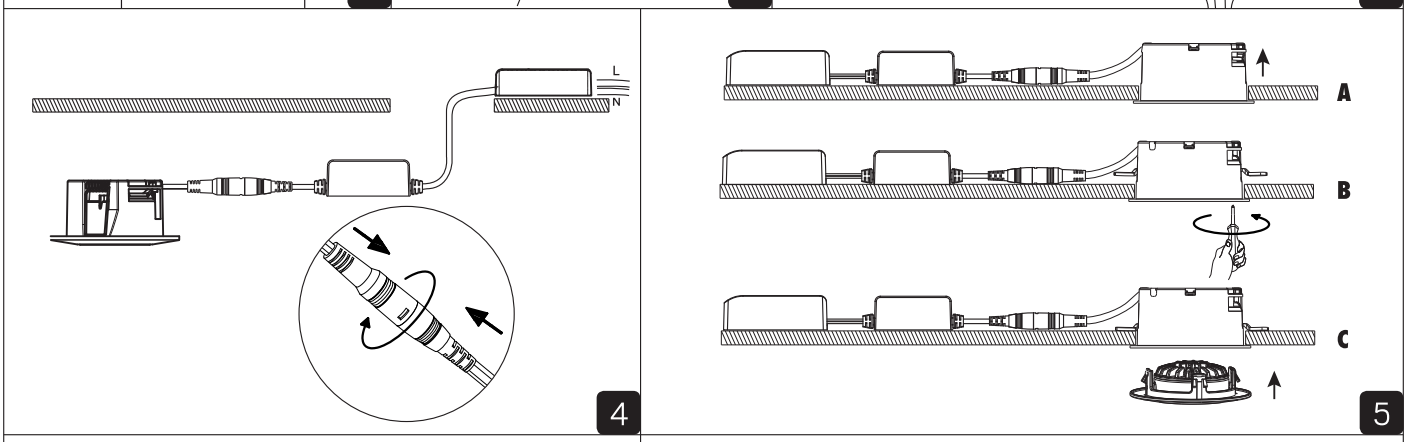


**Z spring installation**

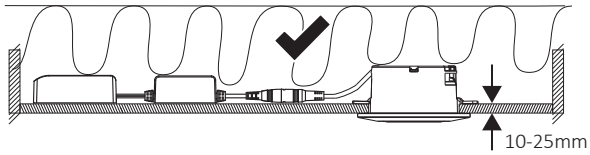


**Recessed installation**

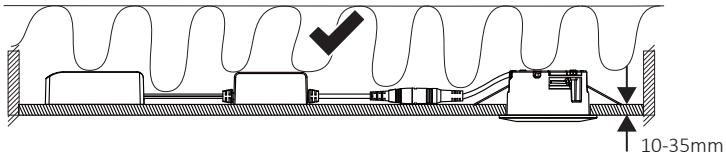


DK: Minimum afstand til brandbart materiale
EN: Minimum distance to flammable material in the beam direction

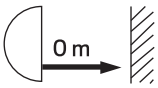


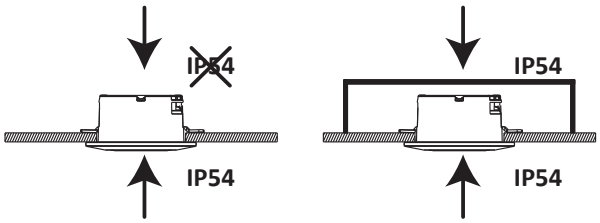


DK: Må kun installeres af autoriseret elinstallatør
EN: Only to be installed by an authorized electrician.

A LED A/S Hammeren 6,DK-6800 Varde www.aled.dk info@aled.dk