JUPITER
6" Downlight

Produkt information

Stilrent downlight med tilbagetrukket prismatisk lysflade. Den tilbagetrukne lysflade sikrer et behageligt diffust lys med lav blænding. Kan leveres med DALI, Casambi, Push dæmp eller 1-10V dæmp

Features

* SDCM<3
* UGR>19
* L90 50.000 timer (Ta 25°C)
* L80 100.000 timer (Ta 25°C)
* CCT 3000K/4000K dipswitch

CE RoHS IP65 IK07 194V 264V IEC EN62471 IEC EN60598

Product data

General Information	
Light source type	SMD LED
Number of LED module	96 pcs
Beam angle of LED module	90°
Color temperature	3000K/4000K
CRI	80
LED module replaceable	Yes
Number of LED driver	1 unit
Driver included	No
Driver replaceable	Yes
L90 lifetime of LED module	50,000 hrs
L80 lifetime of LED module	100,000 hrs
LED module lumen	100 lm± 5 %
Operating and Electrical	
Input Voltage	220-240 Vac
Input frequency	50 to 60 Hz
System wattage	20 W
Inrush current	0.5 A
Inrush time	0.280 ms
Power factor	0.98
Leakage current	Se driver produktark
Max. units per circuit B16 breaker	Se driver produktark
Max. units per circuit C16 breaker	Se driver produktark
Surge protection	Se driver produktark
Ambient temperature range	-20°C to + 40°C
Performance ambient temperature Tq	+25°C

SDCM	3 steps
Optical type	PMMA
Control and dimming	DALI, Casambi, 1-10V
Connection type	Se driver produktark
Protection class IEC	Safety class II
Glow-wire test	650°C， 30 s
UGR	19
PstLM	< 1
SVM	< 0.4
CE Mark	Yes
EU RoHS compliant	Yes
Net weight (piece)	0.7 Kg
Dimension	
Cutout	160-165 mm
Diameter	180 mm
Overall height	60 mm
Mechanical and Housing	
Housing material	Die-casting Aluminum
Optical material	PMMA
Housing color	Front RAL 9016
Heatsink material	Die-casting Aluminum
Ingress protection code	IP65
Mech. impact protection code	IK 07
Remarks	
LED driver failure rate at 50,000hrs	5 %
Power consumption tolerance	± 7 %

Product picture

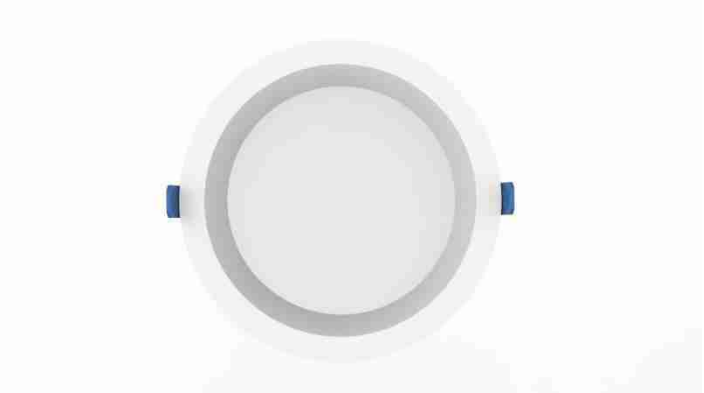
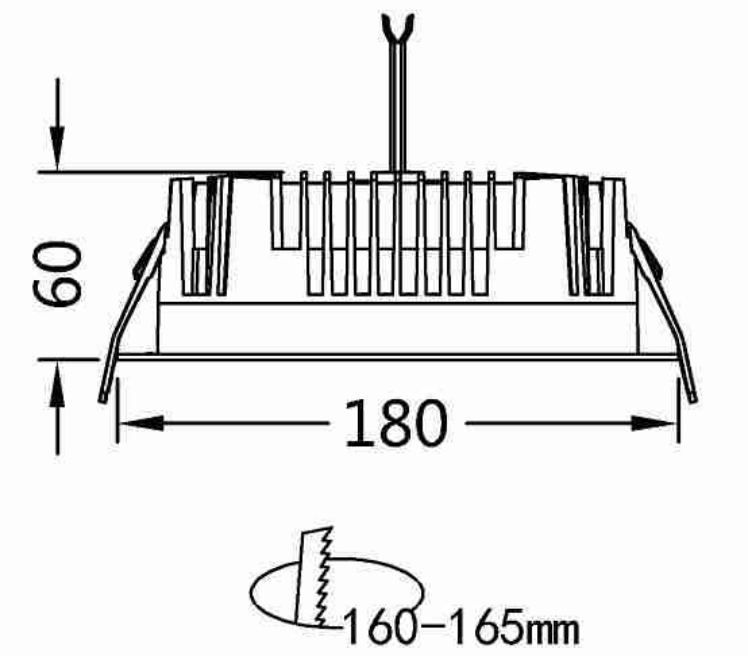
Dimensional drawing